UNITED STATES DEPARTMENT OF AGRICULTURE
Rural Electrification Administration

BULLETIN 1751E-319

SUBJECT: Interoffice Trunking and Signaling

TO: All Telephone Borrowers
REA Telephone Staff

EFFECTIVE DATE: Date of Approval

EXPIRATION DATE: Seven years from effective date

OFFICE OF PRIMARY INTEREST: Central Office Equipment Branch, Telecommunications Standards Division

PREVIOUS INSTRUCTIONS: This bulletin replaces TE&CM Section 319, Issue No. 4, dated October 1978.

FILING INSTRUCTIONS: Discard REA Telecommunications Engineering and Construction Manual (TE&CM) Section 319, Interoffice Trunking and Signaling, Issue 4, dated October 1978, and replace it with this bulletin. File with 7 CFR 1751 and on REANET.

PURPOSE: To provide basic technical information regarding the principles of operation of interoffice trunk circuits and the most commonly used trunking and signaling technologies. The material in this bulletin is intended to be advisory in nature.

Robert Petus
Acting Administrator

11/16/93
Date

TABLE OF CONTENTS

1. General....3
2. Basic Information....3
3. Trunk Signaling....4
4. Loop Signaling....4
5. Polar-Duplex (DX) Signaling....6
6. Multifrequency (MF) Signaling....11
7. Digitally Encoded Signaling....11
8. Common Channel Signaling....12

FIGURES

Figure 1 Reverse Battery Supervision....4
Figure 2 Battery and Ground Pulsing....5
Figure 3a E & M Signaling - Type I Interface....7
Figure 3b E & M Signaling - Type II Interface....8
Figure 4a Signal Lead Extension -Trunk Circuit to Signaling Unit....10
Figure 4b Signal Lead Extension -Between Signaling Units....10
Figure 5 Out-of-Band SS7 Signaling....12
Figure 6 SS7 Link Relationship....14
Figure 7a Associated Signaling....16
Figure 7b Quasi-associated Signaling....16

INDEX:
Trunking, Interoffice Signaling

ABBREVIATIONS and ACRONYMS

ABS	Alternate Billing Service
AC	Alternating Current
AMA	Automatic Message Accounting
CCITT	International Telegraph and Telephone Consultative Committee
CLASS	Custom Local Area Signaling Service
DP	Dial Pulse
DX	Duplex
E/O	Electrical/Optical
EMX	Signal Lead Extension
Hz	Hertz
kb/s	Kilobits per second
LIDB	Line Information Data Base
LSSGR	LATA Switching Systems Generic Requirements
MF	Multifrequency
PCM	Pulse Code Modulation
REA	Rural Electrification Administration
RST	Remote Switching Terminal
SB	Signal Battery
SCP	Service Control Point
SG	Signal Ground
SP	Signal Point
SS7	Signaling System 7
SSP	Service Switching Point
STP	Signal Transfer Point
TE&CM	Telecommunications Engineering and Construction Manual

1. GENERAL

1.1 This bulletin is intended to provide REA borrowers and other interested parties with technical information for use in the design and construction of REA borrowers' telephone systems. It discusses, in particular, the principles of operation of interoffice trunk circuits. It does not discuss the signaling between a Host office and an RST. For the purpose of this bulletin, an interoffice trunk is defined as "the facility used to interconnect two switching centers for talking and signaling purposes."

1.2 This bulletin contains information on the most commonly used trunking and signaling technologies.

2. BASIC INFORMATION

2.1 The trunks described in Sections 3 through 7 of this bulletin are voice, PCM and in-band data communication channels between two switching centers and are referred to as interoffice trunks. They carry data and audio transmission and supervisory signals in both directions and routing and control information in one or both directions.

2.2 The external transmission medium between two switching centers may be metallic, optical fiber, or radio. This medium is terminated at each switching center on an interface unit which is designed to match the impedance of the switching center to the impedance of the transmission medium. Optical fiber is terminated to an Electrical/Optical (E/O) Converter prior to impedance matching.

2.3 Analog trunk circuits historically consisted of discrete components such as relays, resistors and capacitors. Since the introduction of digital switching centers, direct digital trunk terminations have become increasingly popular. In fact, analog trunk circuits in a digital office are becoming nothing more than interface units that convert analog speech and signaling information to or from a digital signaling format.

2.4 A direct digital interface of an interoffice trunk to a digital switching center is often referred to as a trunk circuit. In fact, in a direct digital interface a "trunk circuit" is only internal switch operations that perform the functions of a trunk circuit.

2.5 Whether digital or analog, the basic function of the trunk circuit is the same. It connects the switching center to the external interoffice trunk facility and provides the controls for the voice, holding and signaling circuits. This includes changing the type of signals transmitted or received to the type required by the connecting equipment.

3. TRUNK SIGNALING

3.1 The term "trunk signaling" refers to the means used to transmit trunk seizure information, receiver "on-hook" and "off-hook" information (supervision) and routing and control information over an interoffice trunk. The following sections briefly describe the most commonly used types of trunk signaling.

4. LOOP SIGNALING

4.1 **Reverse-Battery Signaling** Loop signaling over interoffice trunks usually involves a pair of wires over which seizure is effected through closure of a loop, dial pulsing through interruption of the loop closure and supervision (on-hook/off-hook) by battery reversal on the tip and ring. This type of signaling is called reverse-battery and is the preferred and most widely used loop signaling method (See Figure 1). When this type of trunk is terminated to an electromechanical type of trunk circuit, it is limited to about 1200 ohms of loop resistance.

Figure 1
Reverse Battery Supervision

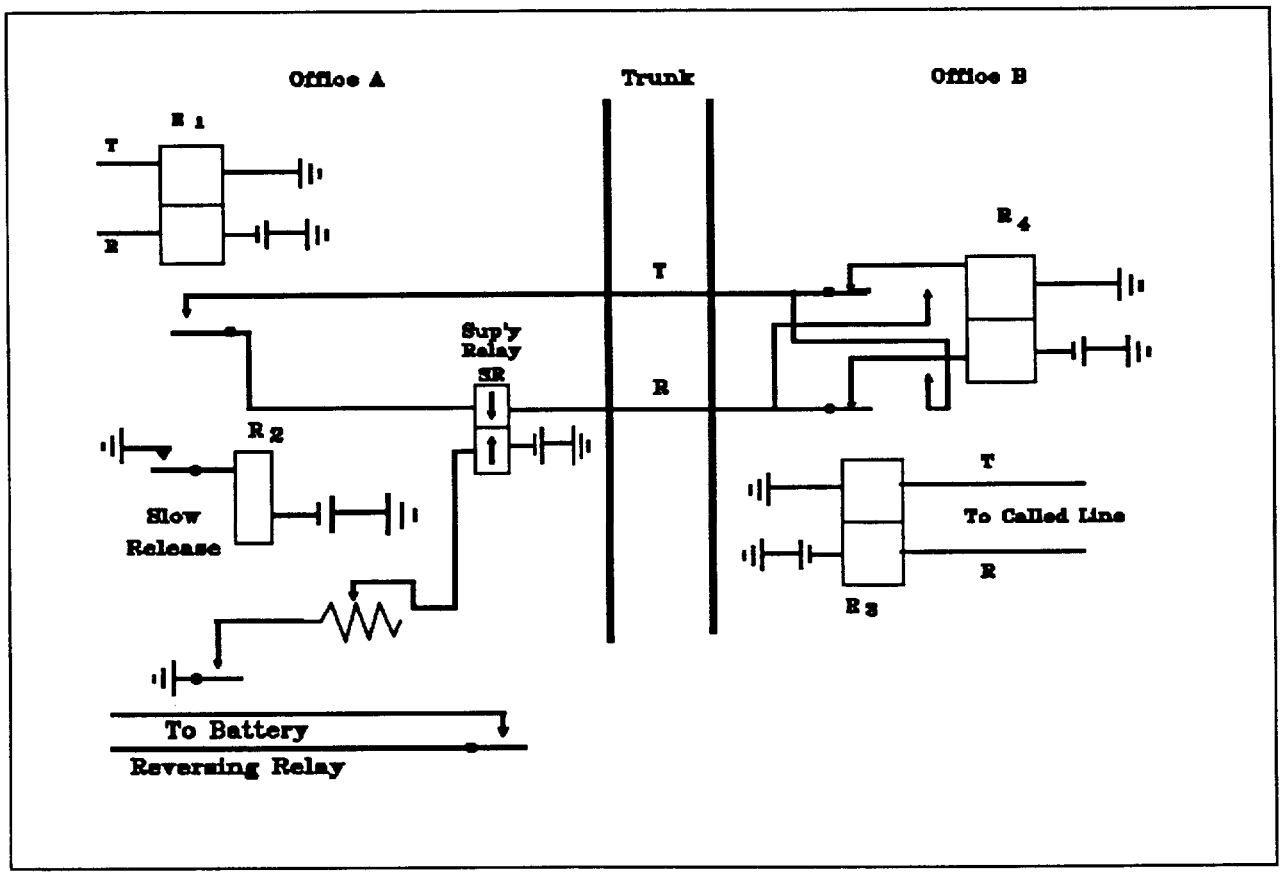

4.2 <u>**Loop-Seizure Battery and Ground Pulsing**</u> Another method of operation known as "loop-seizure battery and ground pulsing" was devised to extend the loop limits to about 2000 ohms and with special equipment such as pulse correction to about 3000 ohms. Battery and ground pulsing is accomplished by having battery and ground at both ends of the loop in a series aiding arrangement during the dial pulse signaling mode. This doubles the voltage available for signaling, thereby extending the dialing and supervision range. Figure 2 shows battery and ground pulsing operation.

Figure 2
Battery and Ground Pulsing

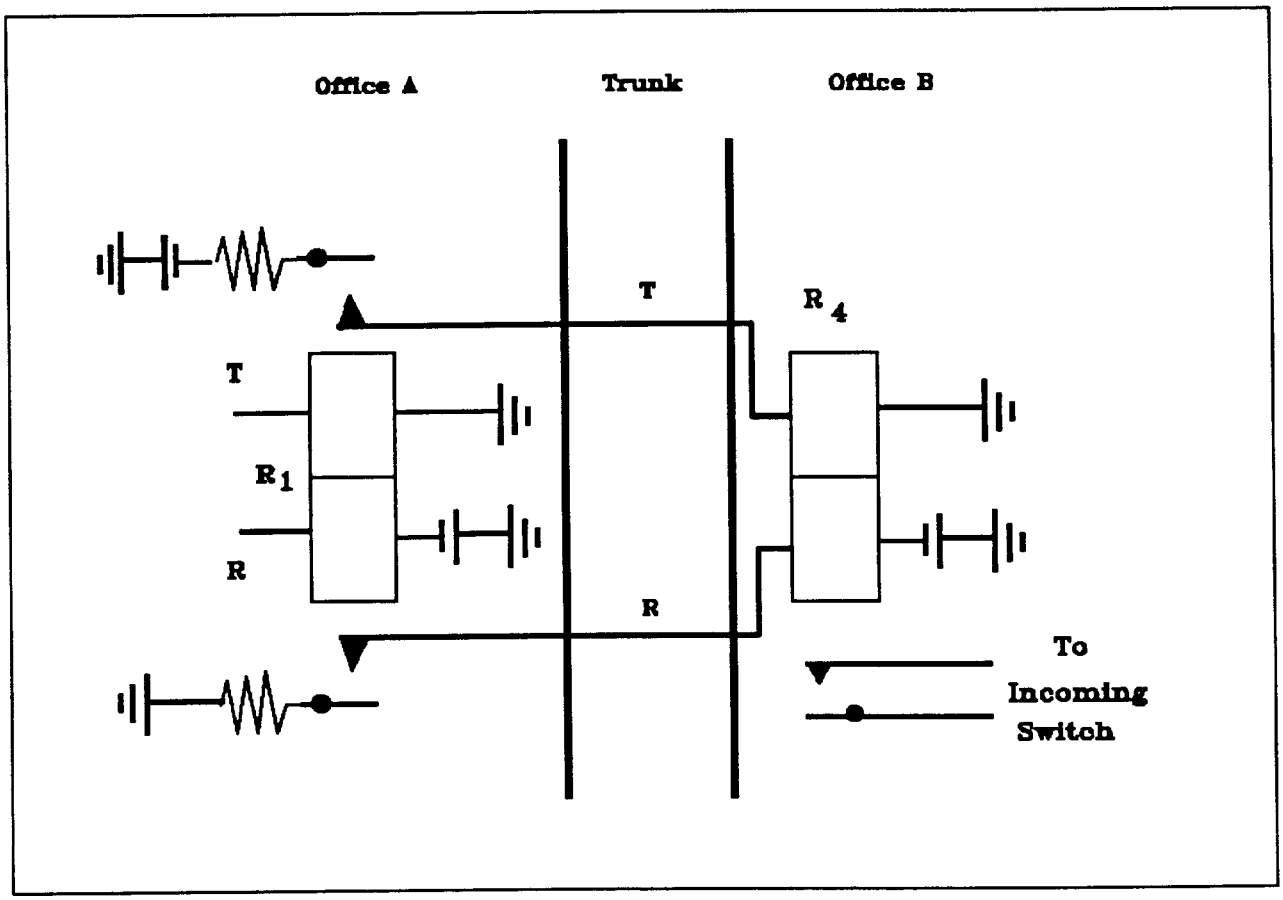

4.3 In a digital office when either loop pulsing or battery and ground pulsing type trunks are terminated to an electronic type trunk circuit, the dialing range is increased even farther. Typically, the loop resistance limit is 2000 ohms and 4500 ohms, respectively. This is due to the sensitivity of an electronic trunk as opposed to electromechanical.

4.4 Supervision, the passing of "on-hook" and "off-hook" information from one office to the other, is normally accomplished in either type of trunk by reverse battery. As the name implies, battery and ground are reversed on the tip and ring to change the signal to the distant office from "on-hook" to "off-hook" or vice versa.

5. POLAR-DUPLEX (DX) SIGNALING

5.1 DX type signaling will provide more reliable service, especially over long trunk loops of up to 5000 ohms and where large and varying differences in earth potentials are encountered. The talking circuit also has a much better balance against AC induction noise. The signaling circuit uses the same conductors (2 wire or 4 wire) as the talking circuit and no filters are required to separate the signaling frequencies from the voice frequencies.

5.2 Originally, E&M lead signaling consisted of two leads between the trunk circuit and the signaling circuit: the M lead which transmitted signals from the trunk equipment to the signaling equipment and the E lead which received signals from the signaling equipment. This original E&M lead signaling arrangement as shown in Figure 3a is called a Type I interface. Because only one lead was used in each direction for signaling with a common ground return, the signaling leads had a much greater susceptibility to noise than balanced circuits. Although this type of circuit was acceptable in electromechanical systems, it is not acceptable in the newer electronic systems. Consequently, a new method, using a pair of leads in each direction over interoffice 4-wire facilities, was developed to improve signaling and reduce noise influence. This Type II interface is shown in Figure 3b.

5.2.1 Type I Interface - This is the original 2-wire E&M signaling arrangement and signaling was accomplished by the trunk circuit applying local -48V battery to the M lead to indicate an off-hook condition and by applying a local ground to indicate an on-hook condition to the signaling circuit. The battery was connected through a current limiting device for fuse and circuit protection. Signaling in the reverse direction (signaling circuit to trunk circuit) was over the E lead and was accomplished by applying local ground to the E lead to indicate an off-hook condition and an open to indicate an on-hook condition. The E lead sensor in the trunk circuit was biased with -48 V battery so that full sensor voltage was present on the E lead during an on-hook condition.

Figure 3a
E & M Signaling - Type I Interface

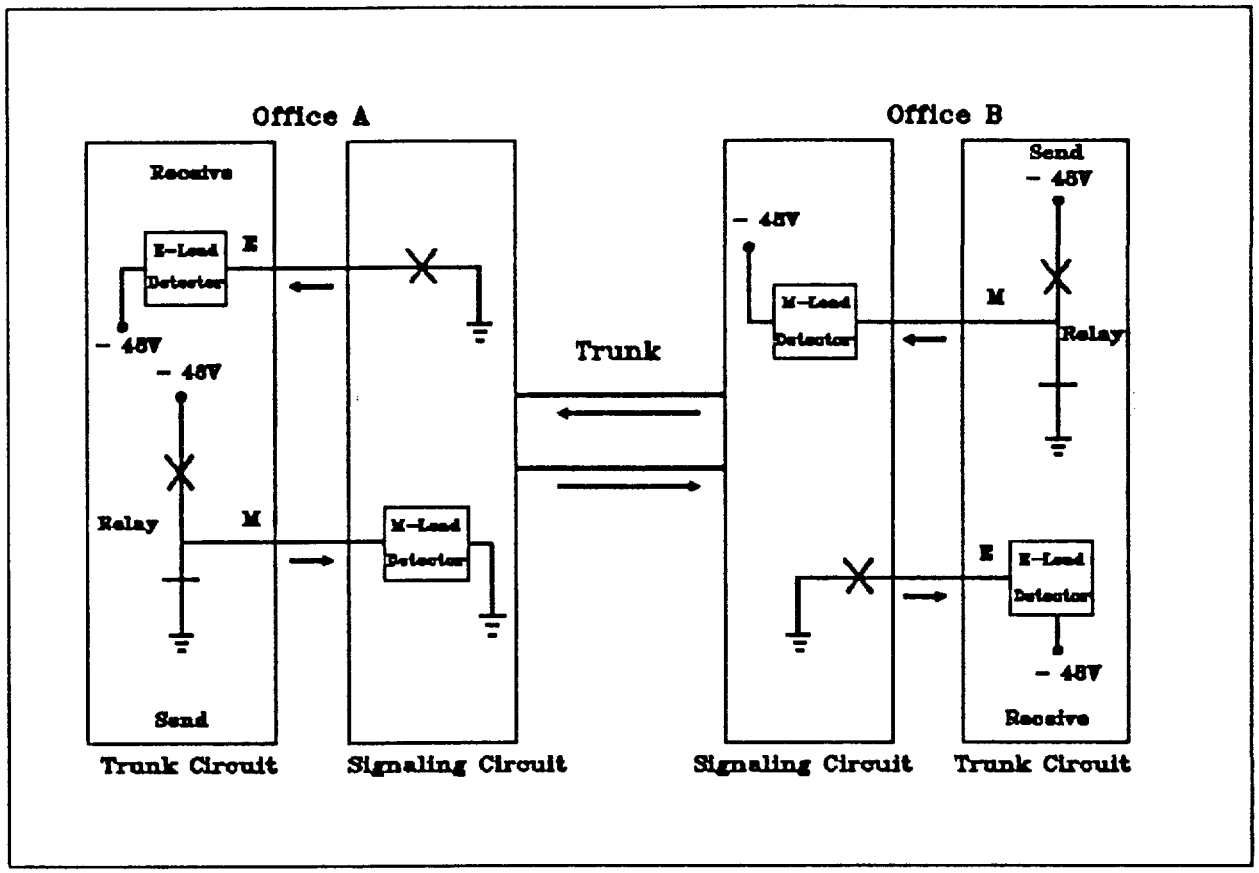

5.2.2 Type II Interface - The Type II interface is a 4 wire facility (E, M, SB (Signal Battery), and SG (Signal Ground)), fully looped arrangement. It was developed to eliminate some unacceptable elements found in the Type I interface. Signaling is accomplished from the trunk circuit to the signaling circuit by applying -48V battery on the SB lead of the signaling circuit which is connected to the trunk circuit and looped back to ground in the signaling circuit on the M lead. The trunk circuit applies a closure to these leads to indicate an off-hook condition and an open to indicate an on-hook condition. In the Type II interface, the current limiting device is on the SB lead for fuse and circuit protection. Signaling in the reverse direction is accomplished by connecting ground to the SG lead to the signaling circuit and looped back to -48 volt battery in the trunk circuit on the E lead. The signaling circuit applies a closure to these leads to indicate an off-hook condition and an open to indicate an on-hook condition. The E lead sensor in the trunk circuit should be biased with -48 V battery so that full sensor voltage is present on the E lead during an on-hook condition.

Figure 3b
E & M Signaling - Type II Interface

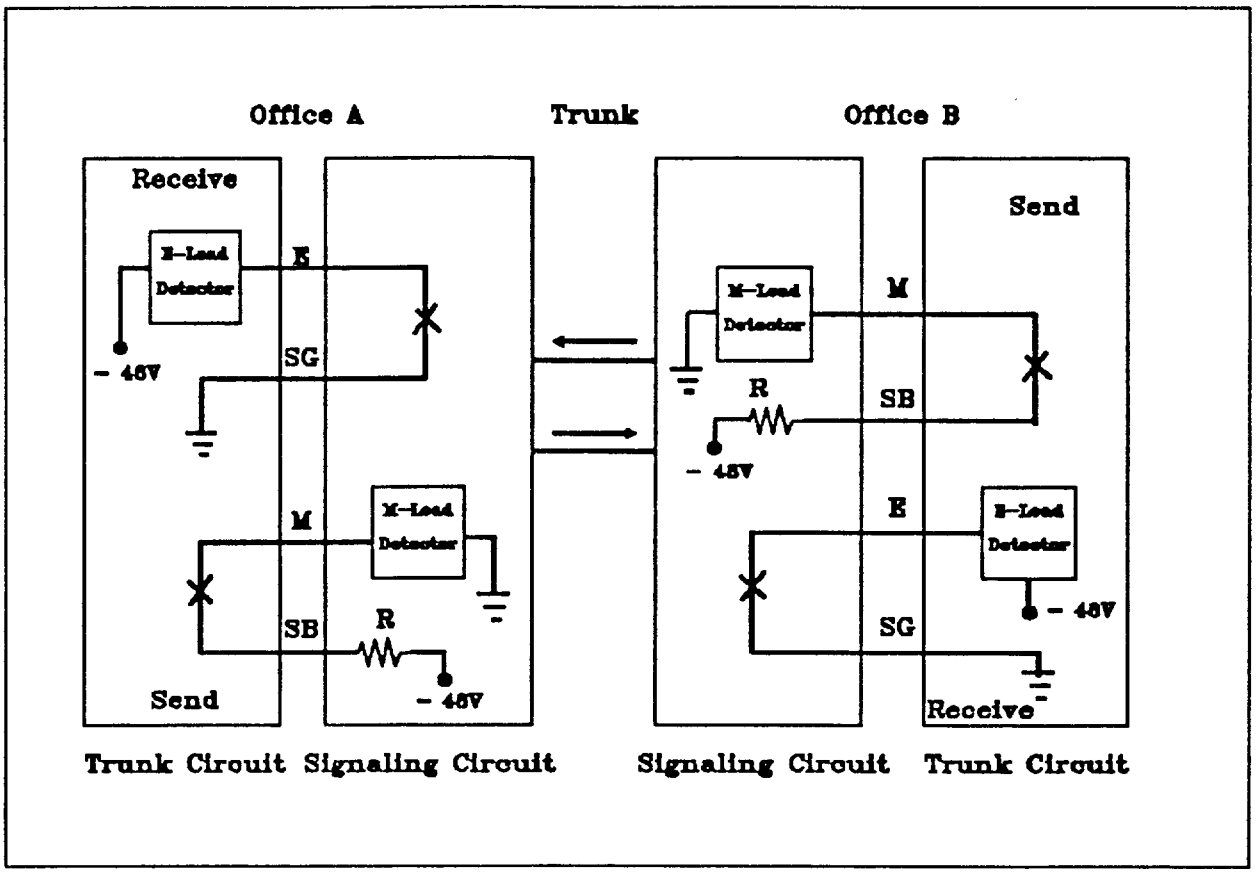

5.2.3 Any trunk circuit or signaling circuit can be directly connected if they have the same interface. However, if a Type I interface connects to a Type II interface, a Type I to Type II conversion circuit is required.

5.3 DX signaling offers the following advantages:

a. Low pulse distortion;

b. Simultaneous signaling in both directions (duplex operation);

c. Ground potential compensation;

d. Reduced noise created by AC induction;

e. Operation through negative impedance type voice frequency repeaters; and

f. No filters to separate the signaling frequencies from the voice frequencies.

5.4 **<u>Signal Lead Extension Equipment</u>**

5.4.1 It is possible to extend the normal operating limits of E&M signaling by the use of a signal lead extension set. This circuit converts signals from signaling circuit E lead conditions to signaling circuit M lead conditions.

5.4.2 Signal Lead Extension (EMX) equipment is similar to DX signaling equipment. In fact, one end of the circuit can be DX equipment. The other end, called the "intermediate end," has a signaling circuit which is designed to work into another signaling unit rather than a trunk circuit. A block diagram of this arrangement is shown in Figure 4a. The other signaling unit is often part of a carrier terminal, although it could be any kind of E and M signaling unit. Also, both ends of the physical circuit could be EMX units. A block diagram of this arrangement is shown in Figure 4b. An example of this would be a trunk group consisting of microwave, cable pairs and finally carrier along the trunk route.

Figure 4a
Signal Lead Extension -
Trunk Circuit to Signaling Unit

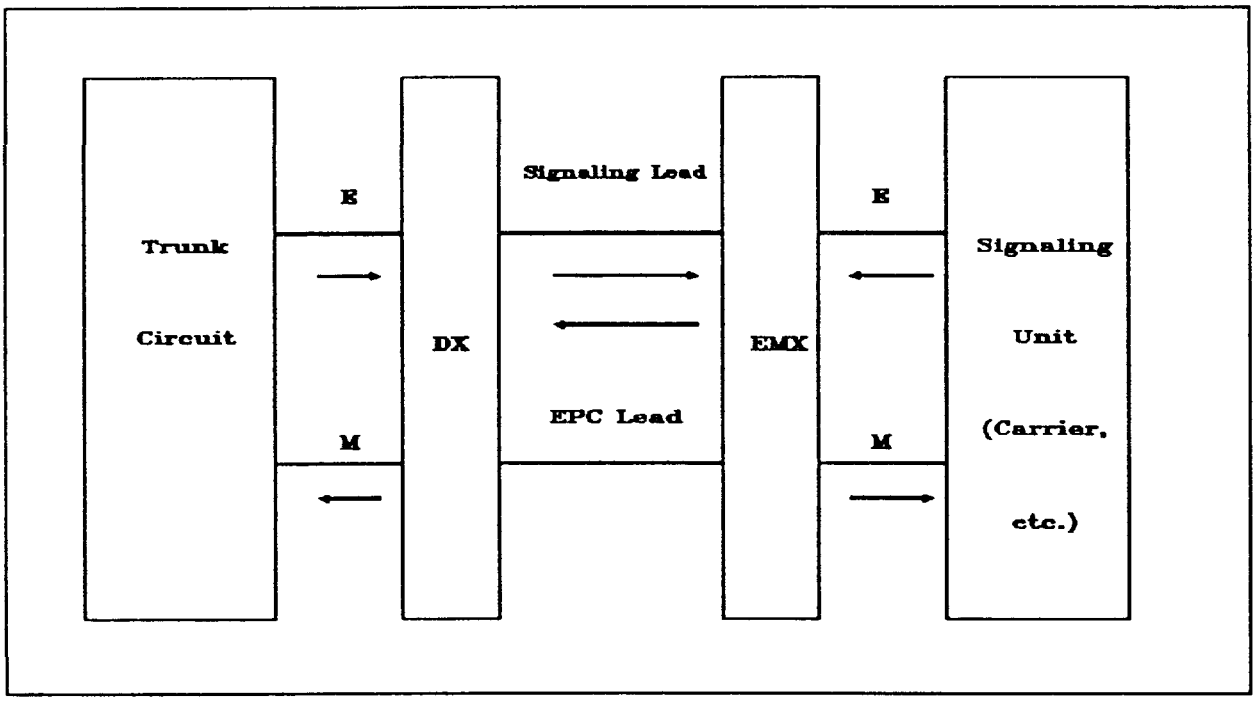

Figure 4b
Signal Lead Extension -
Between Signaling Units

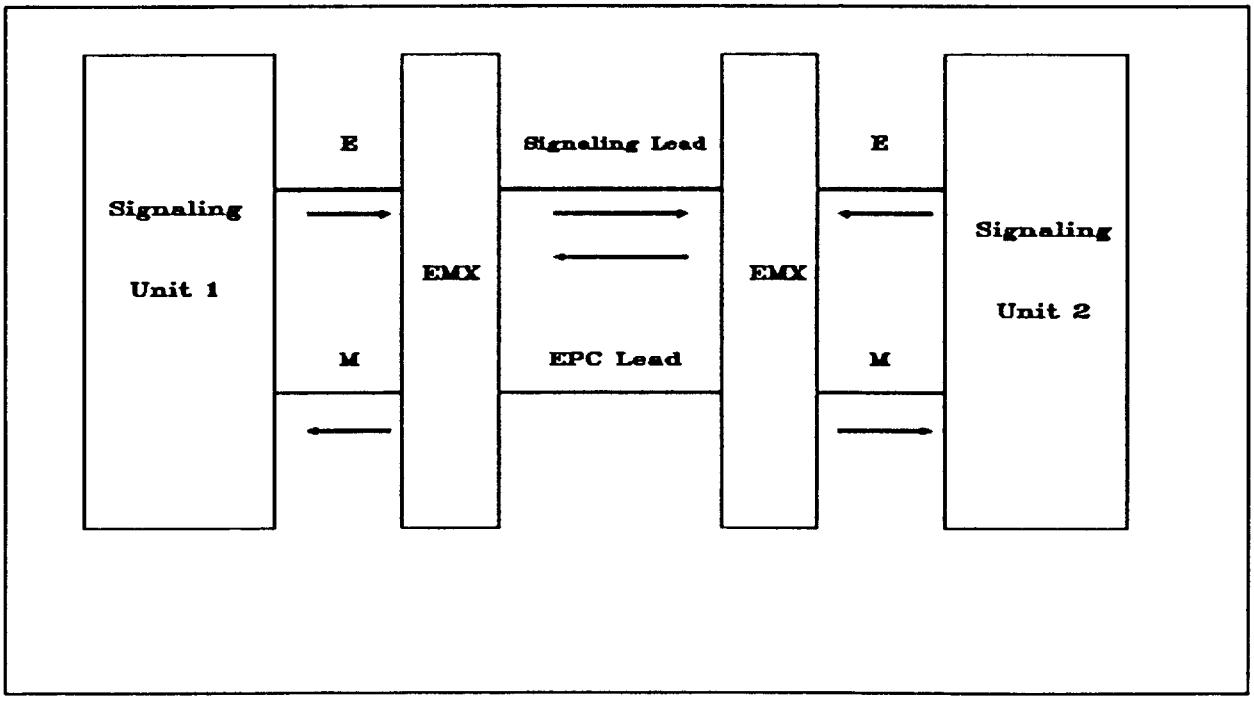

6. MULTIFREQUENCY (MF) SIGNALING

6.1 Multifrequency pulsing is accomplished by the use of multifrequency senders and receivers in the switching systems. Each digit 1 through 0 is represented by a single pulse that consists of a combination of two out of five frequencies. These frequencies are 700, 900, 1100, 1300 and 1500 Hz. An additional frequency, 1700 Hz, is used in combination with the five previously mentioned frequencies in a two out of six combination to provide Automatic Message Accounting (AMA) format functions (KP, ST, etc.). Multifrequency receivers interpret the pulses and pass this information to other equipment to establish connections through the switch. Because multifrequency signaling transmits numerical and control information only, additional signaling equipment such as DX, or loop, is required for supervision.

6.2 Multifrequency pulsing has several advantages such as speed, accuracy and range. Also, because multifrequency signaling requires less holding time per call, a small number of multifrequency senders and receivers can function as common equipment for a large number of trunks.

6.3 Multifrequency signaling pulses are transmitted over regular voice channels, and, because they are in the voice band, can pass through entire facilities, hybrid repeaters and changes in types of facilities as easily as speech.

7. DIGITALLY ENCODED SIGNALING

7.1 Pulse Code Modulation (PCM) is the most widely used digital encoding system in telephony.

7.2 The economic and technical advantages of digitally encoded, integrated transmission and switching are significant. The economic advantages in using a direct digital interface are largely savings brought about by the elimination of trunk circuits in the switching center. This is somewhat offset by added complexity of the digital switch for things such as digital attenuation and special control software. On the technical side, the voice could be encoded at or near the calling subscriber's telephone set and decoded at or near the called subscriber. The transmission quality of the circuit would depend almost entirely on the characteristics of a single encoder and decoder. The digitally encoded signal is not significantly affected by the digital transmission and switching paths. Voice quality will remain good as long as there is only one (or few) analog to digital conversions in the transmission path. Data transmission is also enhanced through the use of integrated transmission and switching. The digital bit stream provides for wideband data (56 kb/s per voice channel plus signaling) and is more immune to interference than analog techniques.

7.3 For a detailed, technical explanation of digital trunking and signaling, refer to the following REA Telephone Engineering and Construction Manual (TE&CM) Section, REA Bulletins, and Bell Communications Research document:

a. TE&CM Section 954 Digital Terminals and Multiplexers (Planned redesignation as Bulletin)
b. Bulletin 1751H-403 Digital Transmission Fundamentals
c. Bulletin 1751H-405 Digital Span Line Systems
d. Bulletin 1751H-601 Lightwave Fundamentals, Systems, and Applications
e. LSSGR TR-TSY-000506 (Section 6) Signaling

8. COMMON CHANNEL SIGNALING

8.1 Signaling System 7 (SS7) is the most recent, and widely used, common channel signaling system in use in the United States today. A future bulletin will be issued addressing SS7 in its entirety, including planning and economic considerations. SS7 is the North American version of the CCITT No. 7 common channel signaling system. Unlike in-band signaling that passes voice and signaling over the same transmission path, SS7 uses separate data links (out-of-band) to pass routing, control, and supervisory information back and forth between other processor controlled nodes. The data link speed in most cases is 56 kb/s. This is about 800 times faster than MF signaling (5600 digits per second as opposed to 7 digits per second using MF signaling). SS7 signaling replaces conventional multifrequency (MF) or dial pulse (DP) signaling. Figure 5 shows a block diagram depicting SS7 signaling.

Figure 5
Out-of-Band SS7 Signaling

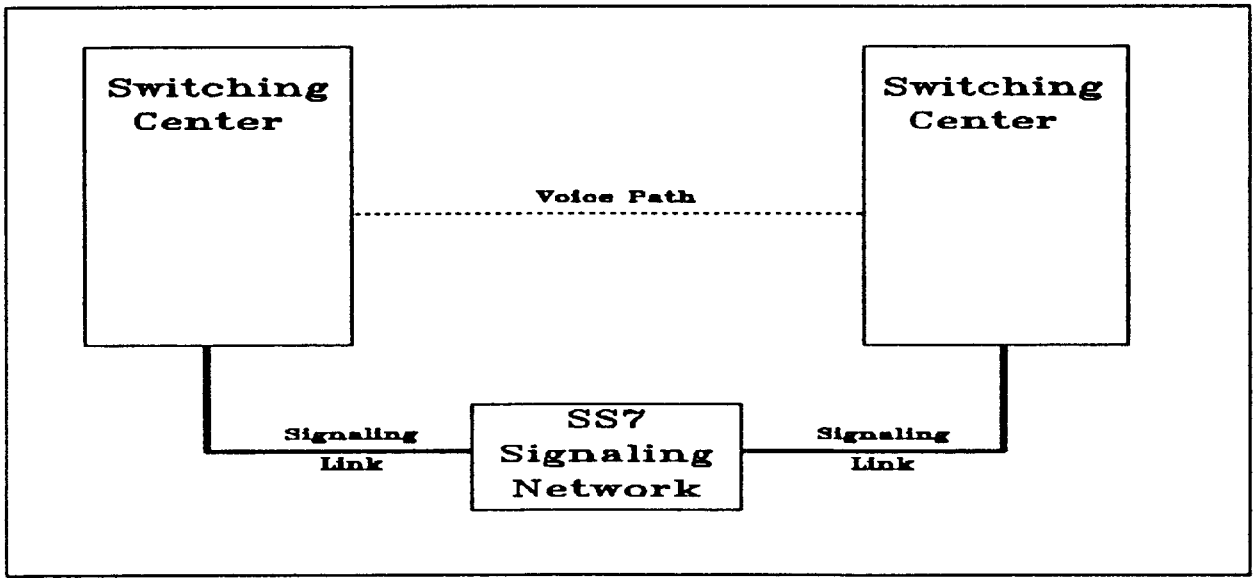

8.2 The SS7 network is comprised of several components. These are Signal Points/Service Switching Points (SP/SSP), Signal Transfer Points (STP), Service Control Points (SCP) and signaling links. The functions of these are described in the following paragraphs.

8.2.1 Signal Point (SP) - This is the basic requirement to interface the SS7 network for SS7 service. It will allow interoffice circuit related services such as Custom Local Area Signaling Service (CLASS), trunk signaling, and ISDN Transport Services. It must be equipped with the required hardware and software for any of these services. It does not provide access to an SCP data base for query/response based services.

8.2.2 Service Switching Point (SSP) - This is a software/hardware addition to an SP to allow access to an SCP for query/response based services of the SS7 network.

8.2.3 Signal Transfer Point (STP) - This is a packet switch that transports and concentrates messages between other SS7 switches. No messages originate or terminate in an STP. It also directs messages from an SSP to the appropriate SCP for query/response requests and then sends the retrieved information back to the SSP and/or other SPs/SSPs for call completion based on the response from the data base.

8.2.4 Service Control Point (SCP) - This is a storage point for data base information in the SS7 network, such as A800 Data Base, Alternate Billing Service / Line Information Data Bases (ABS/LIDB), etc.

8.3 The SS7 network consists of the following two modes of operation:

8.3.1 Query/Response mode (non-circuit related) - An SCP accesses various data bases to get call information in response to a query from an SSP via the STP. It then sends the information back to the SSP via an STP.

8.3.2 Interoffice Trunk Signaling mode (circuit related) - This provides a message channel for call set-up and take-down. It is also used to furnish CLASS between other switching centers that are connected to the SS7 network.

8.4 The SS7 network is connected together by a series of six 56 kb/s digital data links identified by the letters A through F. The relationship of these links is shown in Figure 6. These links are normally installed in pairs (2 links) or quads (4 links) between various network nodes in the hierarchy as described in the following paragraphs.

Figure 6
SS7 Link Relationship

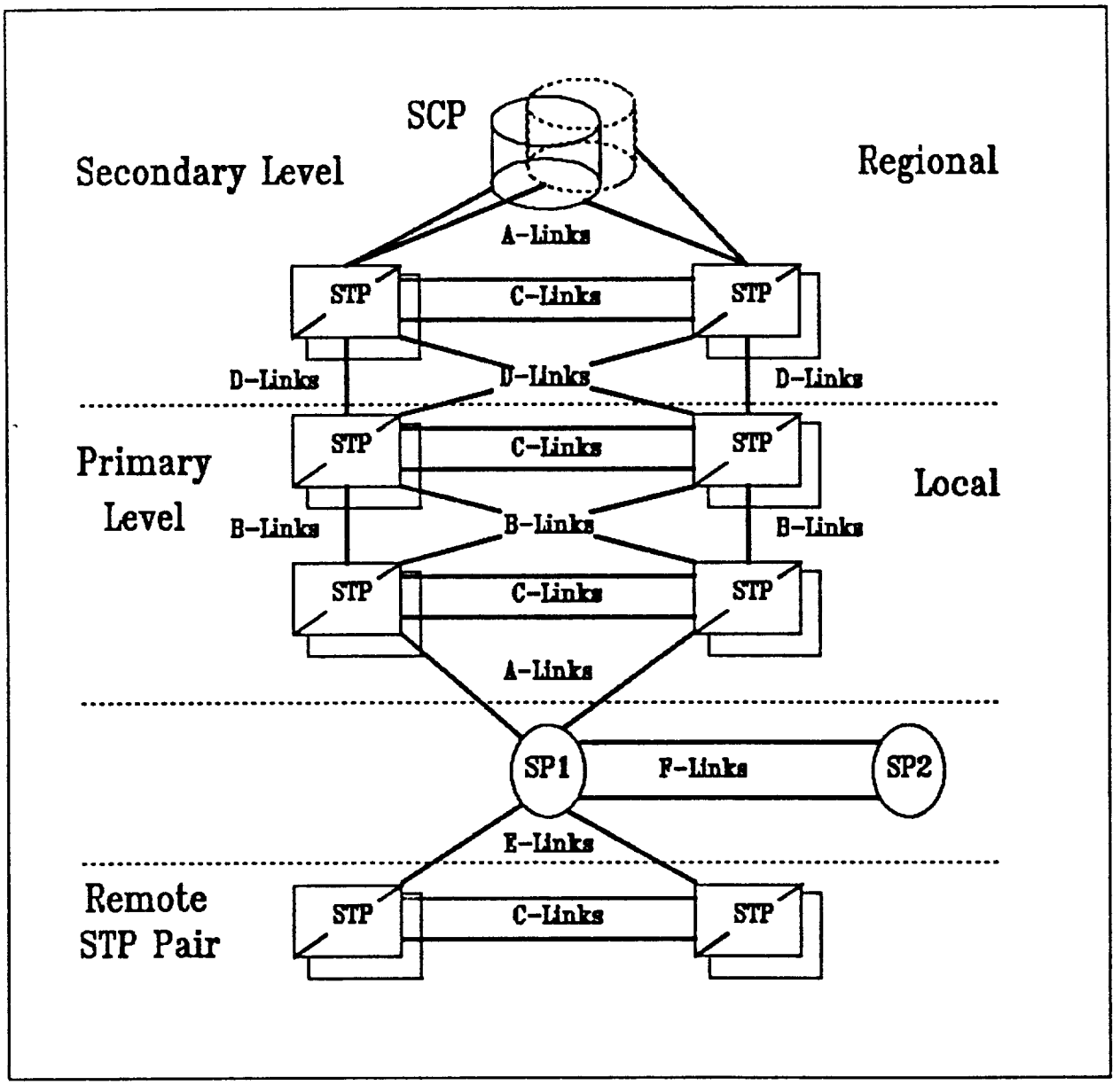

8.4.1 A-links - Access links, provisioned in pairs, connect SP/SSP switches to STPs. They are also used to connect STPs to SCPs.

8.4.2 B-links - Bridge links, provisioned in quads, connect one mated pair of STPs to another mated pair at the same level in the hierarchy (e.g., local to local).

8.4.3 C-links - Cross links, provisioned in pairs, connect one STP to another STP to form a mated pair.

8.4.4 D-links - Diagonal links, provisioned in quads, connect one mated pair of STPs at one level of the network hierarchy with another mated pair of STPs at a different level of the network hierarchy (e.g., local to regional).

8.4.5 E-links - Extended links, provisioned in pairs, connect an SP/SSP to a remote pair of STPs. This provides added protection in the event the home STP fails.

8.4.6 F-links - Fully Associated links, provisioned in pairs, directly connect one SP/SSP with another SP/SSP. This is called associated signaling.

8.5 There are two methods of communicating in the SS7 network: associated signaling and quasi-associated signaling. In associated signaling as depicted in Figure 7a, messages are sent from a signal point directly to another signal point and do not pass through other SPs/SSPs. In quasi-associated signaling as shown in Figure 7b, messages are sent from one SP/SSP through intermediate STPs to other SPs/SSPs or data bases.

Figure 7a
Associated Signaling

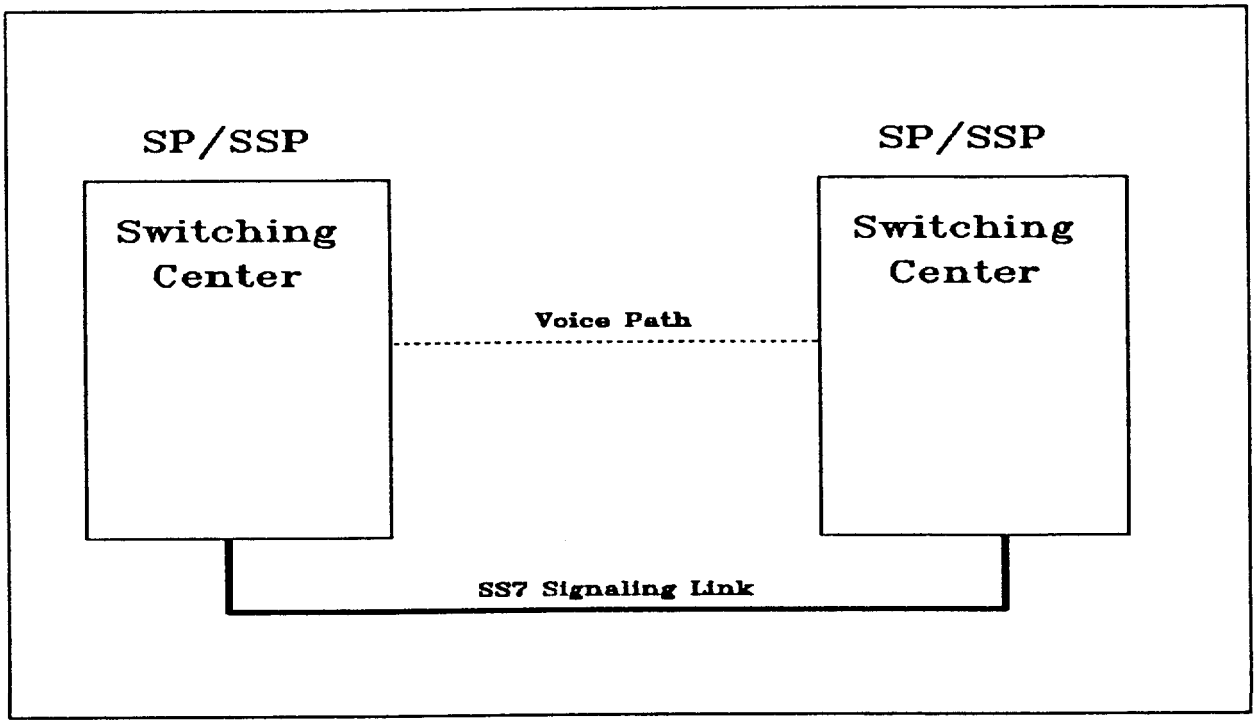
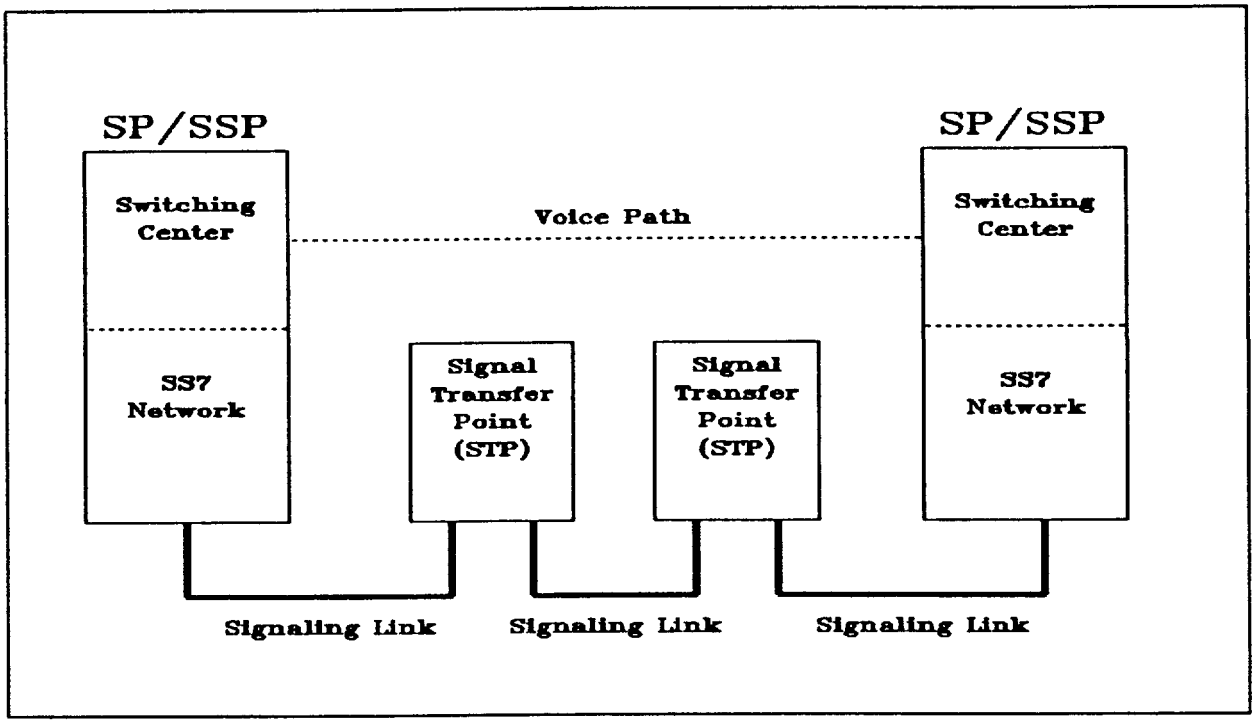
Figure 7b
Quasi-associated Signaling